EORM MS 4245-103
REPLACES FORM MS 4245-42
FILE IN SECT. 2 OF SERVICE MANUAL

Illustrated Parts List

MODEL SERIES

84902, 85902

TYPE NUMBERS

947000 to 947029
947500 to 947522

HOW TO FIND
THE CORRECT NUMBER OF THE PART YOU NEED

These instructions are to be followed when using a Parts List to determine the correct part for an engine.

• • • • • •

A. Refer to Engine Model, Type and Serial Number that is stamped on the blower housing or name plate of engine. Then use the Illustrated Parts List covering this Model Series.

B. Refer to Illustrated Parts section and compare the old part with illustration. The number on the illustration is the Reference Number. Assemblies include all parts shown in frames. All parts shown in assembly frames on which individual reference numbers are given can be purchased separately.

C. After the Reference Number has been identified, refer to the Numerical Parts List, where Master Part Numbers are listed. THE MASTER PART IS USED ON ALL TYPE NUMBERS EXCEPT THOSE TYPE NUMBERS UNDER "NOTE".

D. If a "Note" appears below the Master Part Number, this means that this part differs from the Master Part for certain types. If the Type Number is listed under "Note" order the part referred to.

E. If the Engine Type Number does not appear after any part number listed under "Note", use the Master Part Number.

F. For Type Numbers higher than those covered by this book, please refer to the factory if you are unable to identify the part by comparison.

PRINTED IN U.S.A.

ORIGINAL
BRIGGS & STRATTON
SERVICE PARTS®

84902, 85902

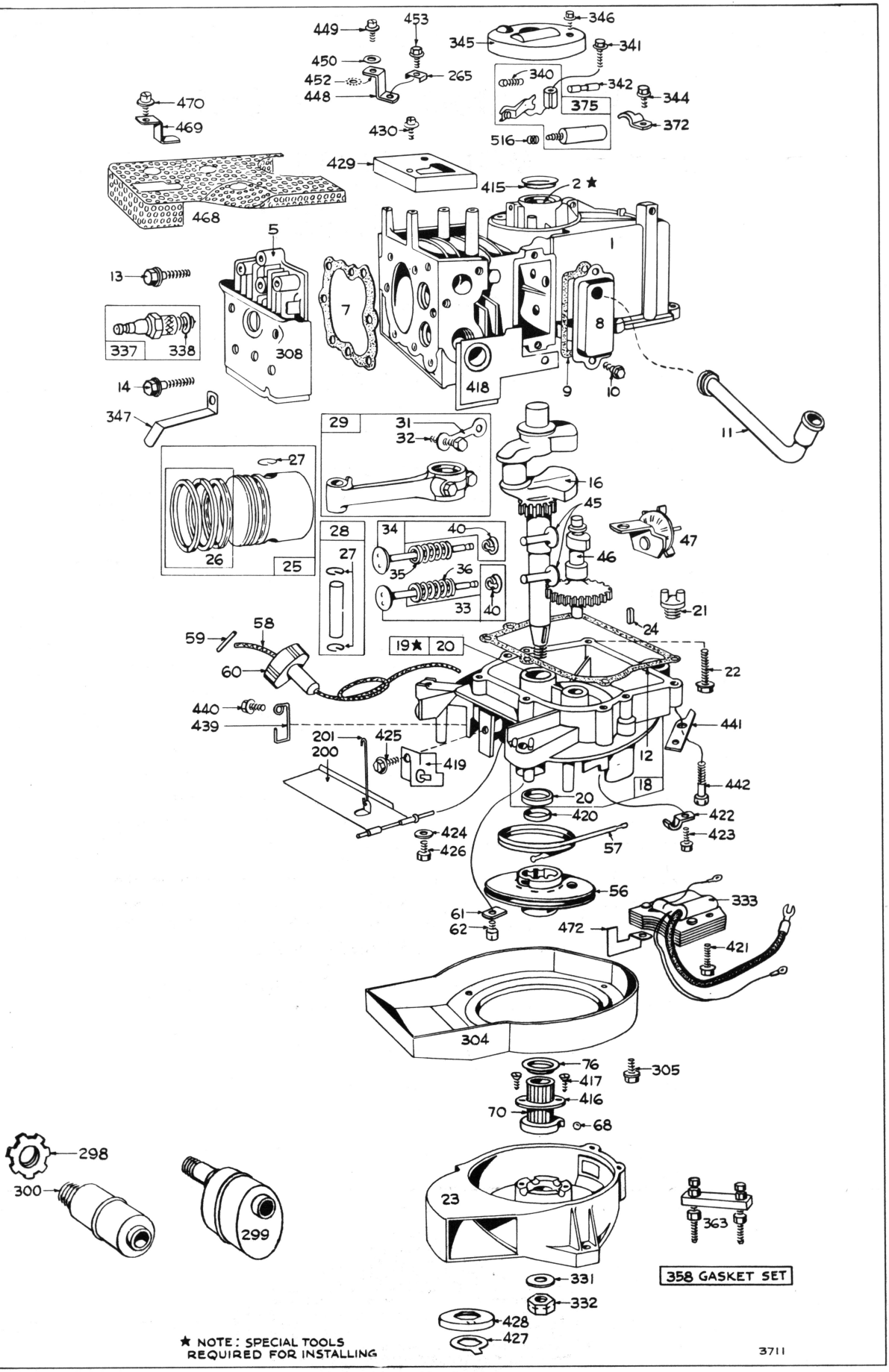

Assemblies include all parts shown in frames.

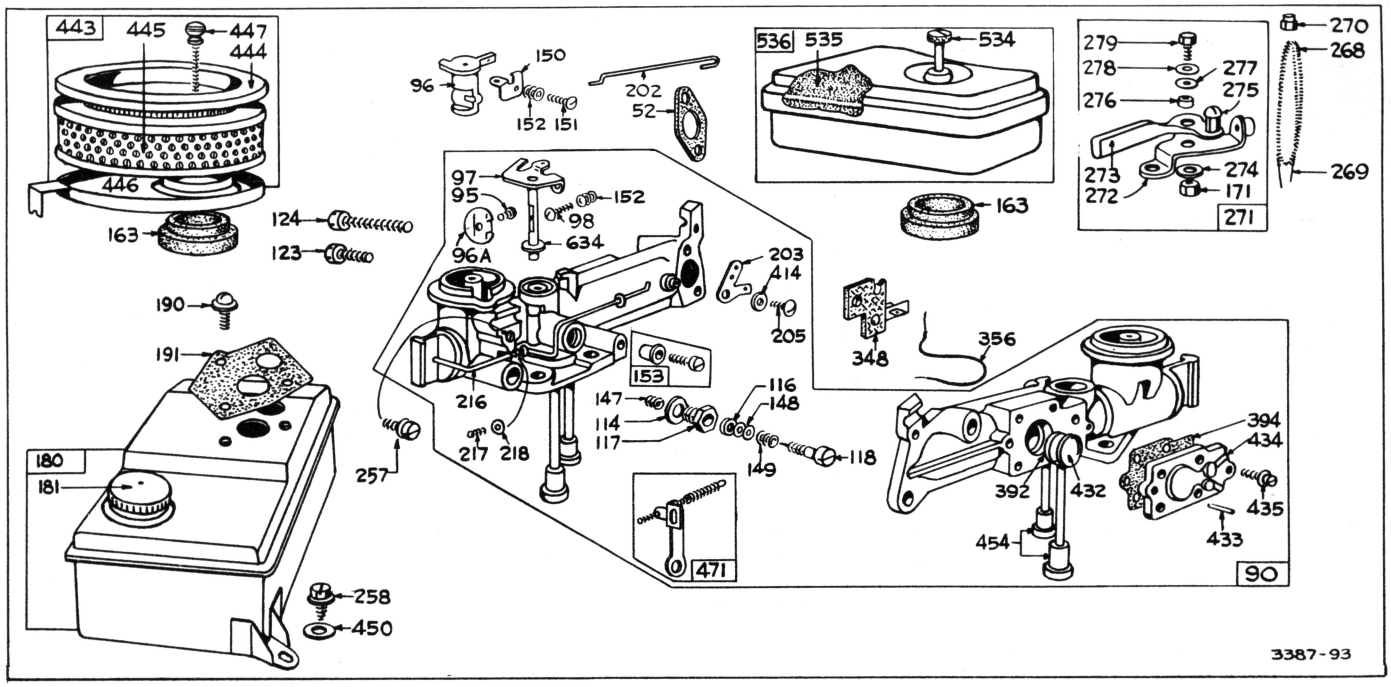

Assemblies include all parts shown in frames.

Parts List

REF. NO.	PART NO.	DESCRIPTION
1	**295450**	Cylinder Assembly Used on Model 84902 Series.
	Note:	**296802** Cylinder Assy. Used on Model 85902 Series.
2	**220538**	Bushing – Cylinder
	Note:	Requires special tools for installation.
5	**210812**	Head – Cylinder
7	***27670**	Gasket – Cylinder Head
8	**296189**	Breather – Valve Chamber
9	***27549**	Gasket – Valve Cover
10	**93394**	Screw – Breather Mounting Sem
11	**67298**	Tube – Breather
12	***27586**	Gasket – Crankcase – .015" thick (Standard)
	***27617**	Gasket – Crankcase – .005" thick
	***27618**	Gasket – Crankcase – .009" thick
13	**93111**	Screw – Cylinder Head (1-15/16" long)
14	**93113**	Screw – Cylinder Head (2-5/16" long)
16	**260450**	Crankshaft
18	**296170**	Sump – Oil
19	**293709**	Bushing – Oil Sump
	Note:	Requires special tools for installation.
20	**291841**	Seal – Oil
21	**66768**	Plug – Oil Filler
	Note:	**296768** Oil Minder Used on type Nos. 947027, 947028, 947520.
22	**93032**	Screw – Sump Mounting Sem (5)
23	**296169**	Flywheel – Magneto
24	**61760**	Key – Flywheel
25	**295587**	Piston Assy. – Standard Used on Model 84902 Series.
	Note:	**295455** Piston Assy. – Standard Used on Model 85902 Series.
	295588	Piston Assembly – .010" O.S. Used on Model 84902 Series.
	Note:	**295456** Piston Assy. – .010" O.S. Used on Model 85902 Series.
	295589	Piston Assembly – .020" O.S. Used on Model 84902 Series.
	Note:	**295457** Piston Assy. – .020" O.S.

* Included in Gasket Set – Part No. 297275.

84902, 85902

REF. NO.	PART NO.	DESCRIPTION
		Used on Model 85902 Series.
	295590	Piston Assembly – .030" O.S.
		Used on Model 84902 Series.
	Note:	**295458** Piston Assy. – .030" O.S.
		Used on Model 85902 Series.
		MODEL SERIES 84902 RING SETS:
26	**294232**	Ring Set – Std. Piston
		210471 Ring, Piston, Compression, Top
		210472 Ring, Piston, Compression, Center
		210473 Ring, Piston, Oil
	294224	Ring Set – .010" O.S. Piston
		210490 Ring, Piston, Compression, Top .010" O.S.
		210489 Ring, Piston, Compression, Center, .010" O.S.
		210491 Ring, Piston, Oil, .010" O.S.
	294225	Ring Set – .020" O.S. Piston
		210493 Ring, Piston, Compression, Top, .020" O.S.
		210492 Ring, Piston, Compression, Center, .020" O.S.
		210494 Ring, Piston, Oil, .020" O.S.
	294226	Ring Set – .030" O.S. Piston
		210496 Ring, Piston, Compression, Top, .030" O.S.
		210495 Ring, Piston, Compression, Center, .030" O.S.
		210497 Ring, Piston, Oil, .030" O.S.
		MODEL SERIES 85902 RING SETS:
	295657	Ring Set – Std. Piston
		210796 Ring, Piston, Comp., Top, Standard
		210797 Ring, Piston, Comp., Center, Standard
		295661 Ring, Oil, (w/expander) Standard
	295658	Ring Set – .010" O.S. Piston
		210799 Ring, Piston, Compression, Top, .010" O.S.
		210798 Ring, Piston, Compression, Center, .010" O.S.
		295662 Ring, Oil, (w/expander) .010" O.S.
	295659	Ring Set – .020" O.S. Piston
		210801 Ring, Piston, Compression, Top, .020" O.S.
		210800 Ring, Piston, Compression, Center, .020" O.S.
		295663 Ring, Oil, (w/expander) .020" O.S.
	295660	Ring Set – .030" O.S. Piston
		210803 Ring, Piston, Compression, Top, .030" O.S.
		210802 Ring, Piston, Compression, Center, .030" O.S.
		295664 Ring, Oil, (w/expander) .030" O.S.
27	**26026**	Lock – Piston Pin
28	**291925**	Pin Assy. – Piston – Standard
	291926	Pin Assy. – Piston – .005" O.S.
29	**294201**	Rod Assy. – Connecting
31	**220756**	Lock – Connecting Rod Screw
32	**92296**	Screw – Connecting Rod
33	**296676**	Valve – Exhaust
34	**296677**	Valve – Intake
35	**260552**	Spring – Intake Valve
36	**26478**	Spring – Exhaust Valve
40	**93312**	Retainer – Valve Spring
45	**230173**	Tappet – Valve
46	**210453**	Gear – Cam
47	**294652**	Oil Slinger Gear & Brkt.
52	***27909**	Gasket – Carburetor
56	**295367**	Pulley – Rewind Starter
57	**294303**	Spring – Rewind Starter
58	**66384**	Rope – Rewind Starter – 47-1/8" long
	Note:	If longer rope is needed, order No. 66514 and cut to required length.
59	**230228**	Pin – Starter Rope
60	**66728**	Grip – Starter Rope
61	**66918**	Bumper – Starter Pulley
62	**93254**	Screw – Pulley Bumper Mounting Sem
68	**63770**	Ball – Clutch
70	**260392**	Ratchet – Rewind Starter
76	**67098**	Washer – Ratchet Sealing
90	**296899**	Carburetor Assembly (Choke-A-Matic)
95	**93385**	Screw – Throttle Valve Mounting Sem
96	**210957**	Throttle – Carburetor
96A	**211203**	Valve – Throttle
97	**297961**	Shaft and Lever – Throttle
98	**93392**	Screw – Machine, Rd. Hd. – 5-40 x 1/2"
114	**66594**	Gasket – Needle Valve Nut
116	**65978**	Packing – Needle Valve
117	**230590**	Nut – Needle Valve
118	**23433**	Valve – Needle
123	**93353**	Screw – Carburetor Mtg.
124	**93360**	Screw – Carburetor Mtg.
147	**230591**	Seat – Needle Valve
148	**22235**	Washer – Needle Valve (2)
149	**26336**	Spring – Needle Valve

* Included in Gasket Set – Part No. 297275.

REF. NO.	PART NO.	DESCRIPTION
150	220105	Connector – Governor Link
151	92634	Screw – Machine, Rd. Hd. – 5-40 x 5/8"
152	26657	Spring – Throttle Adj.
153	298031	Screw – Carburetor Cam and Lever
163	*27660	Gasket – Air Cleaner Mounting
169	90832	Washer – Lock – 1/4 x 3/32 x 5/64"
171	92129	Nut – Hex. – 1/4-28
180	296427	Tank Assembly – Fuel
181	293270	Cap – Fuel Tank
190	93259	Screw – Fuel Tank Mtg.
191	*27911	Gasket – Fuel Tank Mtg.
200	295402	Blade – Governor
201	260363	Link – Governor (Bell Crank to Governor Blade)
202	260362	Link – Governor (Bell Crank to Throttle)
203	221050	Crank – Bell
205	92265	Screw – Bell Crank
216	260449	Link – Choke
217	260189	Spring – Choke Link
218	221198	Washer, Choke Link (3)
257	93263	Screw – Fill. Hd., Sem
258	93062	Screw – Sem
265	22372	Clamp – Wire Casing
268	66986	Casing – Control Wire – 48" long
	Note:	If longer casing is needed, specify length in inches; if a shorter casing is needed, order No. 66986 and cut to required length.
269	26099	Wire – Control, 54" long
	Note:	If longer wire is needed, specify length in inches; if a shorter wire is needed, order No. 26099 and cut to required length.
270	63426	Locknut – Control Wire Casing
271	290568	Lever Assy. – Control
272	290584	Base – Control Lever
273	290642	Lever – Control
274	91237	Washer – Lock – 1/4 x 3/32 x 5/64"
275	92287	Screw – Machine, Rd. Hd. – 10-32 x 1/4"
276	22834	Washer – Spacer
277	22368	Washer – Control Lever
278	22725	Washer – Control Lever
279	92306	Screw – Cap, Hex. Hd. – 1/4-28 x 5/8"
298	260367	Locknut – Muffler
299	296376	Muffler – Exhaust (Lo-Tone)
	Note:	296653 Muffler – Exhaust Used on Type No. 947521. Uses: 230672 Nipple – Exhaust 296045 Clamp – Muffler
300	89966	Muffler – Exhaust
304	220973	Housing – Blower
305	93216	Screw – Blower Housing Mounting Sem
308	220969	Cover – Cylinder Head
331	221074	Washer – Flywheel
332	230534	Nut – Flywheel
333	296171	Armature – Magneto (Includes ignition cable)
337	29693	Plug – Spark (with gasket)
338	29806	Gasket – Spark Plug
340	26018	Spring – Breaker Arm
341	93381	Screw – Contact Finger Post Mounting Sem
342	65704	Plunger – Breaker Point
344	93042	Screw – Condenser Clamp Mounting Sem
345	220366	Cover – Breaker Point and Condenser
346	93014	Screw – Dust Cover Mounting Sem
347	220197	Switch – Stop
348	296110	Plate Assembly – Stop Switch Insulator
356	296185	Wire – Ground
358	297275	Gasket Set
372	220477	Clamp – Condenser
375	294628	Breaker Points and Condenser Set
392	260455	Spring – Pump Diaphragm
394	27910	Diaphragm
414	220982	Washer – Bell Crank
415	221236	Plug – Cylinder
416	220957	Cover – Ratchet
417	93217	Screw – Ratchet Cover Mounting Sem
418	221061	Cover – Cylinder Side
419	220962	Anchor – Spring
420	67018	Seal – Crankshaft
421	93215	Screw – Armature to Sump Mounting Sem
422	220754	Retainer – Ignition Cable
423	93214	Screw – Ignition Cable Retainer Mounting Sem
424	67072	Washer – Governor Blade Mounting
425	93216	Screw – Spring Anchor Mounting Sem
426	93216	Screw – Governor Blade Assembly Mounting Sem
427	221104	Washer – Flywheel Nut
428	221103	Washer – Flywheel Nut Retainer
429	221094	Cover – Cooling
430	93042	Screw – Cooling Cover Mounting Sem
432	221377	Cap – Spring
433	93265	Pin – Diaphragm Cover
434	210959	Cover – Diaphragm
435	93141	Screw – Diaphragm Cover
439	260475	Guide – Rope
440	93014	Screw – Rope Guide Mounting Sem
441	221228	Support – Fuel Tank
442	93360	Screw – Base Mounting (1)
443	296271	Cleaner Assembly – Air
444	221182	Cover – Air Cleaner
445	296188	Cartridge – Air Cleaner
446	221181	Support – Air Cleaner
447	93257	Screw – Thumb
448	220965	Bracket – Control Casing
449	93347	Screw – Sem
450	67072	Washer – Plain
452	92029	Washer – Lock, Shakeproof

* Included in Gasket Set – Part No. 297275.

84902, 85902

REF. NO.	PART NO.	DESCRIPTION
453	**93394**	Screw – Casing Clamp Mounting
	Note:	**92578** Screw – Casing Clamp Mounting
		92290 Washer – Lock Used on type Nos. 947028, 947520.
454	**296178**	Housing – Fuel Pipe Screen (for 3/16" O.D. Pipe)
	296191	Housing – Fuel Pipe Screen (for 1/8" O.D. Pipe)
468	**221253**	Screen – Air Intake
469	**221256**	Clamp – Air Intake Screen
470	**92848**	Screw – Clamp Mtg. Sem
471	**296428**	High Speed Stop Assy.
472	**221285**	Scraper – Flywheel
516	**260374**	Spring – Connector
534	**93322**	Screw – Air Cleaner
535	**27987**	Element – Air Cleaner
536	**296766**	Cleaner Assembly – Air
634	**270167**	Washer – Throttle Shaft (Felt)